TOTO

LAVATORIES

L4706E

Console Lavatory

Features

- It's a beautiful design that uses the ceramic's natural roundness with ultra-thin frame.
- The vessel's spacious design also makes the users look beautiful.
- CeFiONtect Technology:
  super smooth, ion barrier glazing for a clean lavatory

Specifications

Size:	600W x 420D x 90H mm
Material:	Ceramic

Parts description

Faucet not included

- **L4706E**
  Console Lavatory w/o Overflow w/ slotted Waste Drainer, Brackets

Colors

White (#XW)

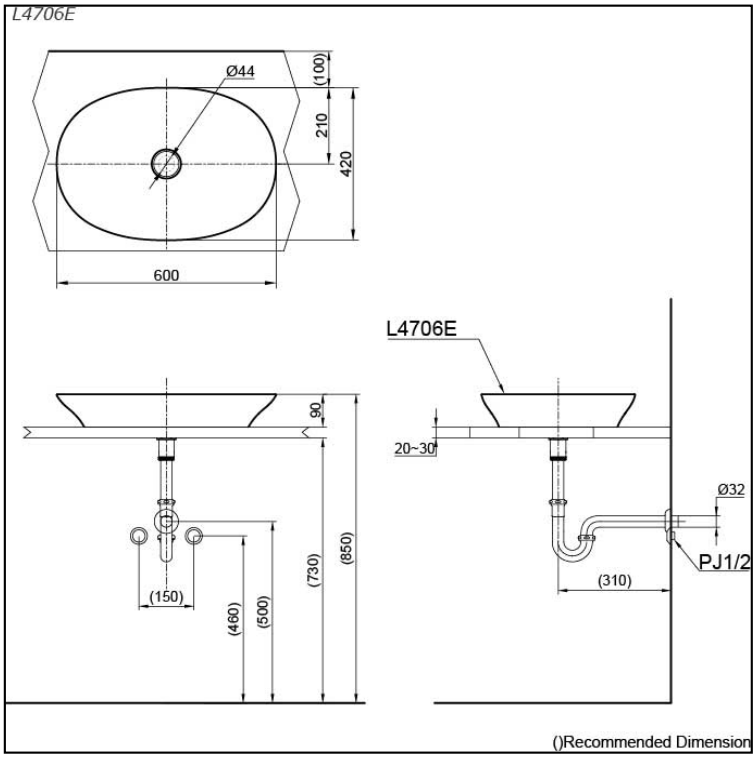

Please consult a TOTO representative for more details

All rights reserved by TOTO company. Specifications and sizes are subject to change without notice.