TOTO

# TOILETS

*NEOREST AH*
*Luxurious Smart Toilet*

# CS989PVT / TCF9788WZ (DISCONTINUED)

GOOD DESIGN GREEN GOOD DESIGN AWARD 2018

iF DESIGN AWARD 2019

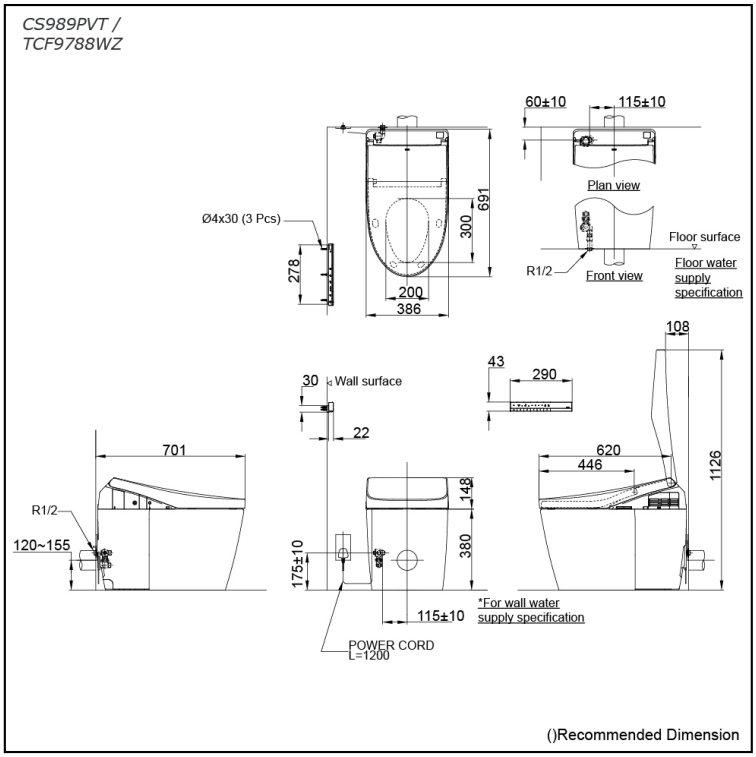


## Features

- Luxury, elegant and seamless design
- Hybrid Ecology System
  - WATER SAVING dual flush 4.5 / 3.0L
  - Minimum required water pressure only at 0.05MPa (Dynamic)
- New TORNADO FLUSH system. 360 degree cleaning power reaches every spot using less water from newly developed bowl
- TORNADO FLUSH waterjet outlet is newly placed in hidden position to present a cleaner aesthetics
- New RIMLESS DESIGN bowl. Simply beautiful in shape with no shaded area make cleaning easier
- AIR-IN WONDERWAVE uses air rich water droplets to produce comfortable cleaning sensation
- Build-in with Motion Sensor - Microwave technology
- HEATED SEAT with temperature control
- PREMIST, a fine spray of mist making it difficult for dirt to adhere
- EWATER+ keeps toilet bowl and nozzle clean by preventing bacterial with sanitizing effect
- Auto powerful DEODORIZER activates after every usage
- Adjustable WARM AIR DRYING

EWATER+, highly effective sanitizer created by electrolyzed chloride ion in tap water. After use, it returns back to original state, environmental friendly

## Specifications

| | |
|---|---|
| Flush system: | TORNADO FLUSH |
| Water Use: | 4.5L / 3.0L |
| Rough-in: | 120~155 mm |
| Bowl Shape: | Elongated |
| Water Pressure: | 0.05MPa~0.75MPa |
| Power Rating: | 220~240V, 50/60Hz, 820~839W |
| Length of Power Cord: | 1.2 m |
| Material: | Bowl -Vitreous China<br>Seat & Cover -Plastic<br>Remote Controller -Aluminium |
| Size: | 386Wx691Dx528H mm |

## Parts description

- **CS989PVT**
  Water Closet Bowl (P-Trap)
  (Rough-in 120~155)
- **TCF9788WZ**
  WASHLET unit

## Colors



Please consult a TOTO representative for more details



All rights reserved by TOTO company. Specifications and sizes are subject to change without notice.

White (#NW1)


All rights reserved by TOTO company. Specifications and sizes are subject to change without notice.