TOTO

LAVATORIES

PACIFICA
Wall Hung Lavatory with Half Pedestal

LW908CKS
LW908HFKS
(DISCONTINUED)

Features

- Modern, elegant styling
- Deep, generous basin for comfortable use
- Rear overflow
- The PACIFICA Suite: Matching toilets, lavatories, urinals and bidets

Specifications

Size:	650W x 495D x 470H mm
Material:	Vitreous China

Parts description

Faucet not included

- **LW908CKS**
  Wall Hung Lavatory
- **LW908HFKS**
  Half Pedestal

Colors

White

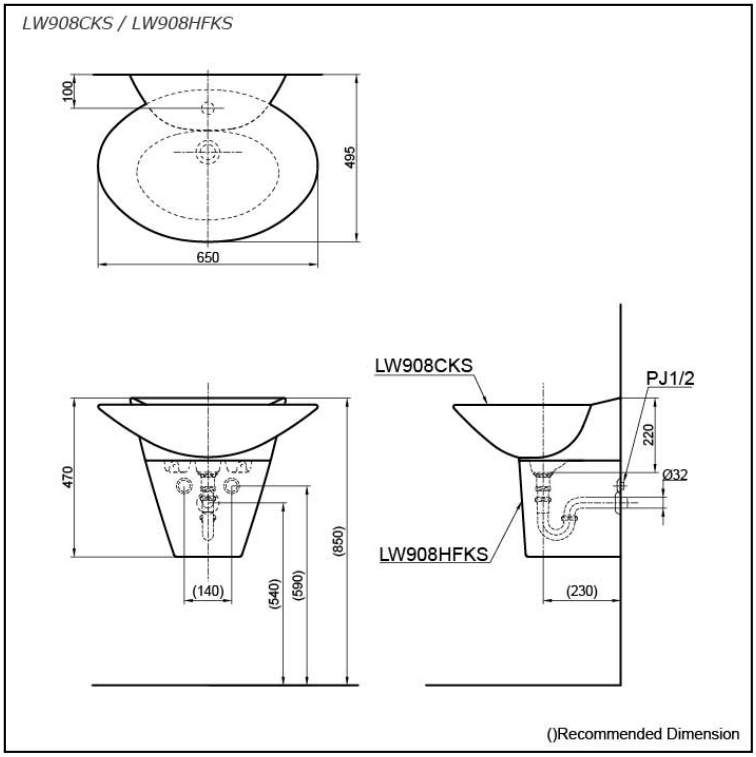

Please consult a TOTO representative for more details

All rights reserved by TOTO company. Specifications and sizes are subject to change without notice.