TOTO

# LAVATORIES

# LT763V

*BASIC+*
*Self Rimming Lavatory*

## Features

- CEFIONTECT technology: super smooth, ion barrier glazing for a clean lavatory
- Rear overflow
- The BASIC+ Suite: Matching toilets, lavatories bidets and bathtubs

## Specifications

| | |
|---|---|
| Size: | 530W x 450D x 177H mm |
| Material: | Ceramic |

## Parts description

Faucet not included

- **L763E**
  Self Rimming Lavatory

## Colors

White (CEFIONTECT)

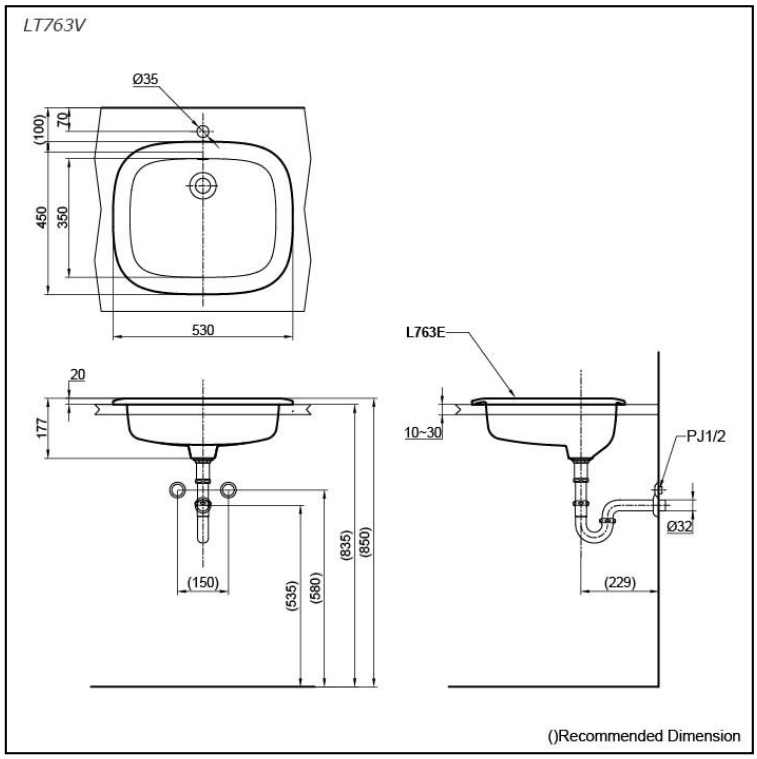




Please consult a TOTO representative for more details



All rights reserved by TOTO company. Specifications and sizes are subject to change without notice.