TOTO

FAUCETS

TBG03201B

GS Series
Bath Filler without Shower
(3-Holes)

Features

- Design concept is gorgeous and smart
- Safety control with heat insulating handle.
- High corrosion resistance plating

Specifications

Finish:	Chrome
Material:	Brass
Water Pressure:	0.07MPa~1.0MPa

Parts description

- **TBG03201B**
  Bath Filler without Shower (3-Holes)

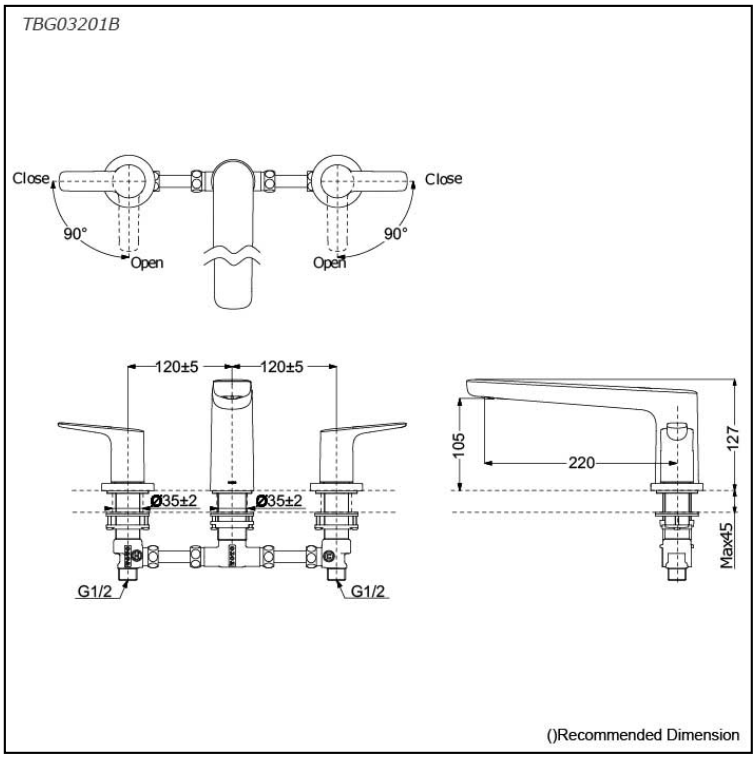

Please consult a TOTO representative for more details

All rights reserved by TOTO company. Specifications and sizes are subject to change without notice.

Flow Rate

TBG03201B

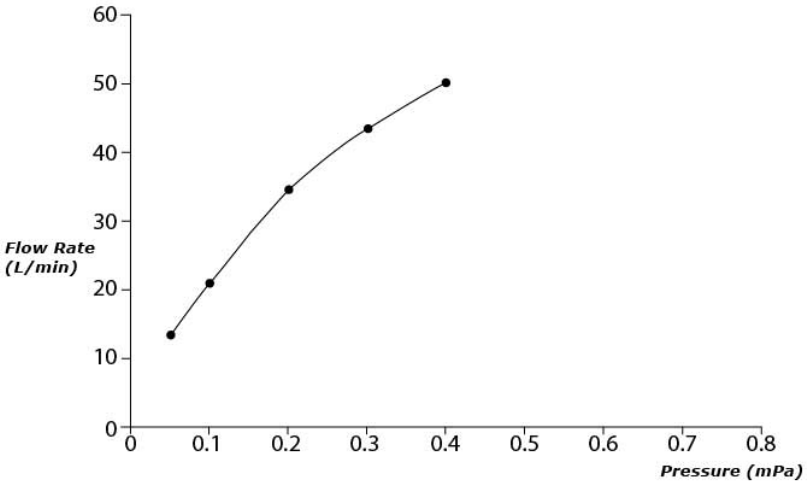

All rights reserved by TOTO company. Specifications and sizes are subject to change without notice.