TOTO

FAUCETS

TLG03303DA

GS Series
Single Lever Lavatory Faucet
(Semi-tall Vessel) (w/ Pop-up Waste)

Features

- Design Concept is Gorgeous and Regal
- Long lasting, COMFORT GLIDE mechanism for a smooth operation
- High corrosion resistance plating
- TOTO aerated water technology, ECOCAP adds air to the warer to achieve full water jet with less amount of water usage

Specifications

Finish:	Chrome
Material:	Brass
Water Pressure:	0.05MPa~1.0MPa

Parts description

- **TLG03303DA**
  Single Lever Lavatory Faucet (Semi-tall Vessel) (w/ Pop-up Waste)

Certifications

reddot award 2018 winner

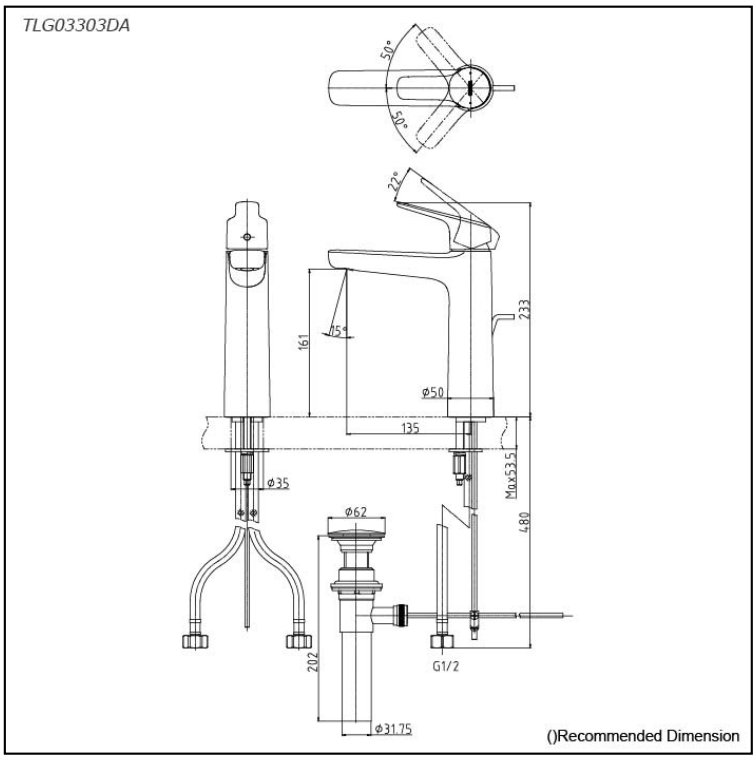

Please consult a TOTO representative for more details

All rights reserved by TOTO company. Specifications and sizes are subject to change without notice.