TOTO

# LAVATORIES

# LW387B

*Console Lavatory*

## Features

- Rear overflow
- CEFIONTECT Technology:
  super smooth, ion barrier glazing for a clean toilet bowl

## Specifications

| | |
|---|---|
| Size: | 450W x 450D x 145H mm |
| Material: | Ceramic |

## Parts description

Faucet not included

- **LW387B**
  Console Lavatory

## Colors

White (CEFIONTECT)

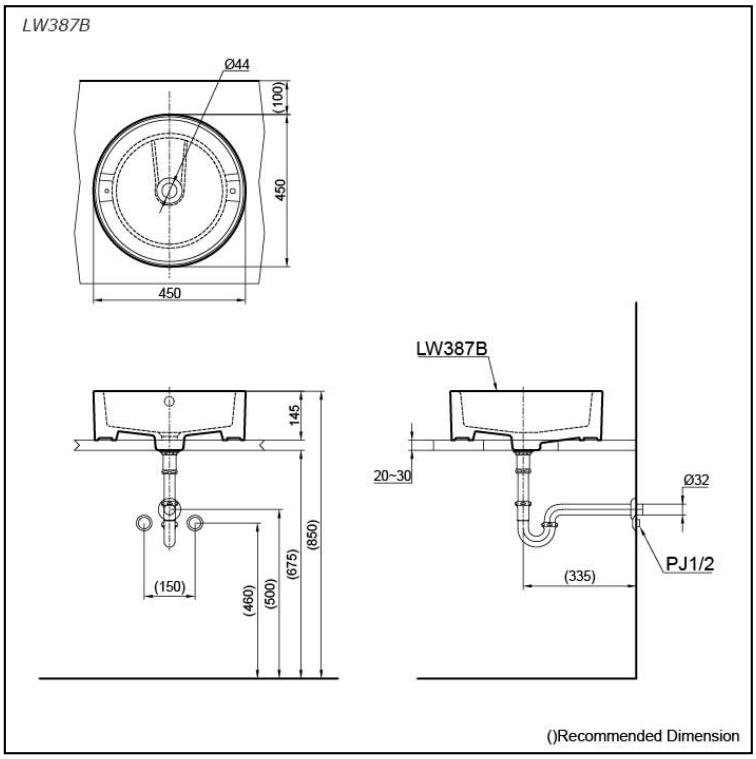




Please consult a TOTO representative for more details



All rights reserved by TOTO company. Specifications and sizes are subject to change without notice.