TOTO | *TOUCHLESS FAUCET*

TLE26010L

Touchless Faucet
Wall Mounted

Features

- Hands-free usage increases hygiene
- Sensor positioned underneath the spout head for more accurate user detection
- SELF POWER Technology:
  Self-generated power saves electricity
- WATER SAVING
- ECO CAP Technology:
  TOTO aerated bubble technology adds air to the water to achieve full water jet

Specifications

Flow Rate:	2L/min
Water Pressure:	0.05MPa ~ 0.75MPa
Finish:	Nickel Chrome

Parts description

Single Supply Combination

- **Self Powered Combination**
  1. TLE26010L (Wall-mounted spout)
  2. TLE03502L (Controller)

Certifications

WaterMark

reddot winner 2021

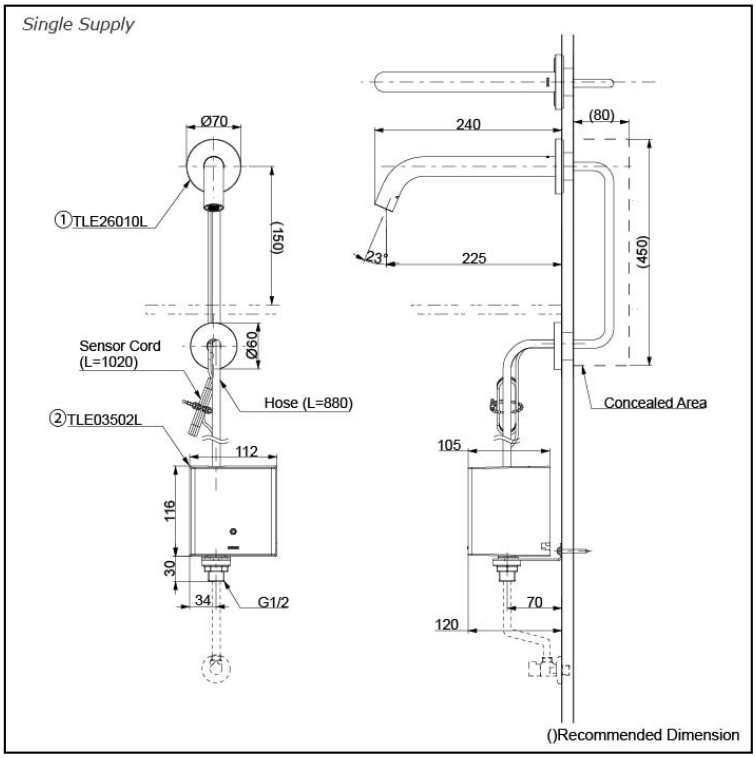

Please consult a TOTO representative for more details

All rights reserved by TOTO company. Specifications and sizes are subject to change without notice.