TOTO

TOILETS

NEOREST LS
Luxurious Smart Toilet

CS911PVT / TCF87120GAA

reddot winner 2022 | DESIGN AWARD 2022 | GOOD DESIGN | GREEN GOOD DESIGN AWARD 2023

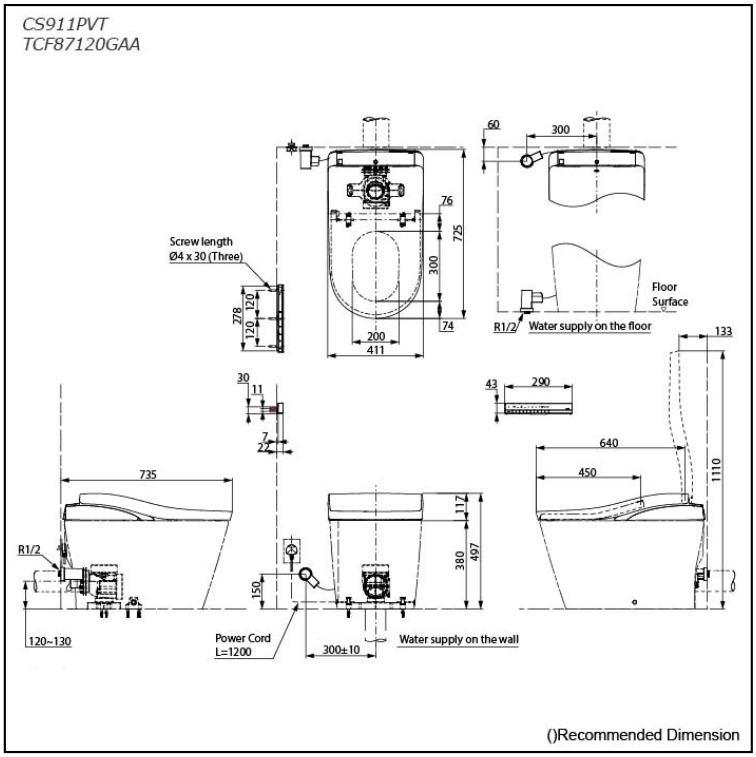

Features

- New TORNADO FLUSH uses less water to produce powerful streams of water that travels along a hairpin curve of new RIMLESS DESIGN bowl creating a 360 degree of cleaning power that washes every spot
- PREMIST, a fine spray of mist making it difficult for dirt to adhere
- EWATER+ not only keeps toilet bowl and nozzle clean by preventing bacterial with sanitizing effect but is also sprayed under the seat to prevent other accumulated waste, ensures a long-lasting cleanliness
- Automatic operation: Lid opens, closes and toilet flushes when sensor is activated
- AIR-IN WONDERWAVE uses air rich water droplets to produce comfortable cleaning sensation
- HEATED SEAT with temperature control
- Auto powerful DEODORIZER activates after every usage
- Adjustable WARM AIR DRYING
- Hybrid Ecology System
  - WATER SAVING

Specifications

Flush system:	TORNADO FLUSH
Water Use:	4.5L / 3.0L
Rough-in:	120~130 mm
Bowl Shape:	D-Shape
Water Pressure:	0.05MPa~0.75MPa
Power Rating:	220~240V, 50/60Hz, 835~863W
Length of Power Cord:	1.2 m
Material:	Bowl -Vitreous China Seat & Cover -Plastic Remote Controller -Aluminium
Size:	411Wx725Dx497H mm

Parts description

- **CS911PVT**
  Water Closet Bowl (P-Trap)
  (Rough-in120~130)
- **TCF87120GAA**
  WASHLET unit

Optional Parts

- T53P100VR
  Floor Flange

Colors

White (#NW1)

Silver
- WASHLET Frame Cover
- Remote Controller

Please consult a TOTO representative for more details

All rights reserved by TOTO company. Specifications and sizes are subject to change without notice.

Important Note

- Do not use other water then allowed by the laws and ordinances of the region of use. Only use portable water.

  Do not use seawater or recycled water.

- This is an electrical product. Do not install it anywhere water is likely to get on the product or anywhere with humidity high enough that water is likely to form on the surface of this product. When using the product in a bathroom, install a fan or ventilation port and ensure good air flow through the bathroom.

- If the controller is not being used over a certain period of time, the batteries in the controller are highly recommended to be removed. Batteries in the remote controller are recommended to be replaced on a yearly basis.

- The following factors may affect IR signal strength and top unit operation: product and remote control location, room size, shape, construction materials, and degree of darkness (color) of ceiling and walls.

All rights reserved by TOTO company. Specifications and sizes are subject to change without notice.