TOTO

TOILETS

NEOREST DH
Luxurious Smart Toilet

CS989PVD / TCF9575Z

GOOD DESIGN GREEN GOOD DESIGN AWARD 2018

reddot winner 2020

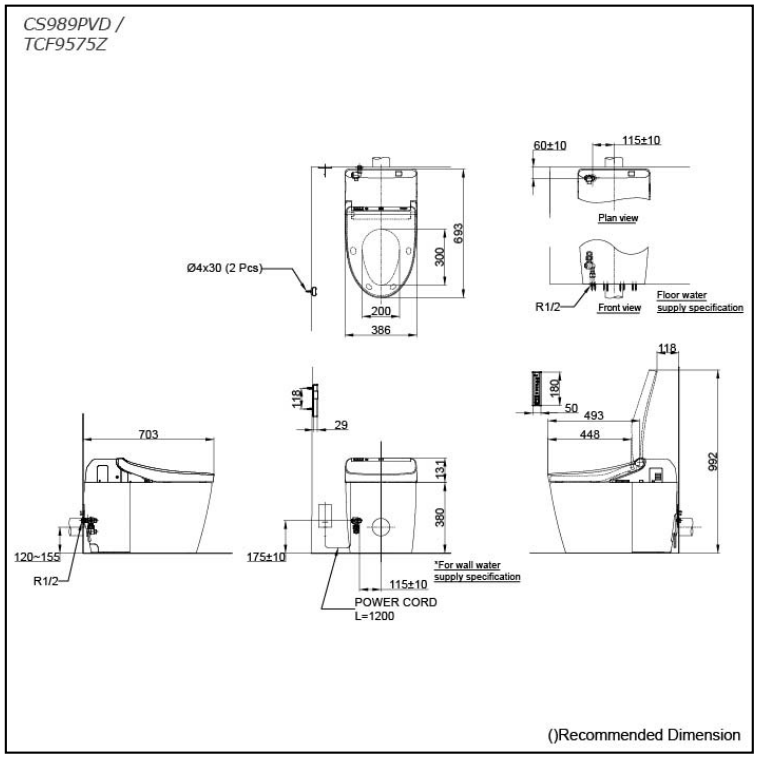

Features

- Luxury, elegant and seamless design
- Hybrid Ecology System
  - WATER SAVING dual flush 4.5 / 3.0L
  - Minimum required water pressure only at 0.05MPa (Dynamic)
- New TORNADO FLUSH system. 360 degree cleaning power reaches every spot using less water from newly developed bowl
- TORNADO FLUSH waterjet outlet is newly placed in hidden position to present a cleaner aesthetics
- HEATED SEAT with temperature control
- PREMIST, a fine spray of mist making it difficult for dirt to adhere
- EWATER+ keeps nozzle clean by preventing bacterial with sanitizing effect
- Auto powerful DEODORIZER activates after every usage
- Adjustable WARM AIR DRYING

EWATER+, highly effective sanitizer created by electrolyzed chloride ion in tap water. After use, it returns back to original state, environmental friendly

Specifications

Flush system:	TORNADO FLUSH
Water Use:	4.5L / 3.0L
Rough-in:	120~155 mm
Bowl Shape:	Elongated
Water Pressure:	0.05MPa~0.75MPa
Power Rating:	220~240V, 50/60Hz, 820~828W
Length of Power Cord:	1.2 m
Material:	Bowl -Vitreous China Seat & Cover -Plastic Remote Controller -Aluminium
Size:	386Wx693Dx511H mm

Parts description

- **CS989PVD**
  Water Closet Bowl (P-Trap)
  (Rough-in 120~155)
- **TCF9575Z**
  WASHLET unit

Colors

White (#NW1)

Certifications

Please consult a TOTO representative for more details

All rights reserved by TOTO company. Specifications and sizes are subject to change without notice.