TOTO

TOILETS

CW813PJWS

LE MUSE
WALL FACED TOILET

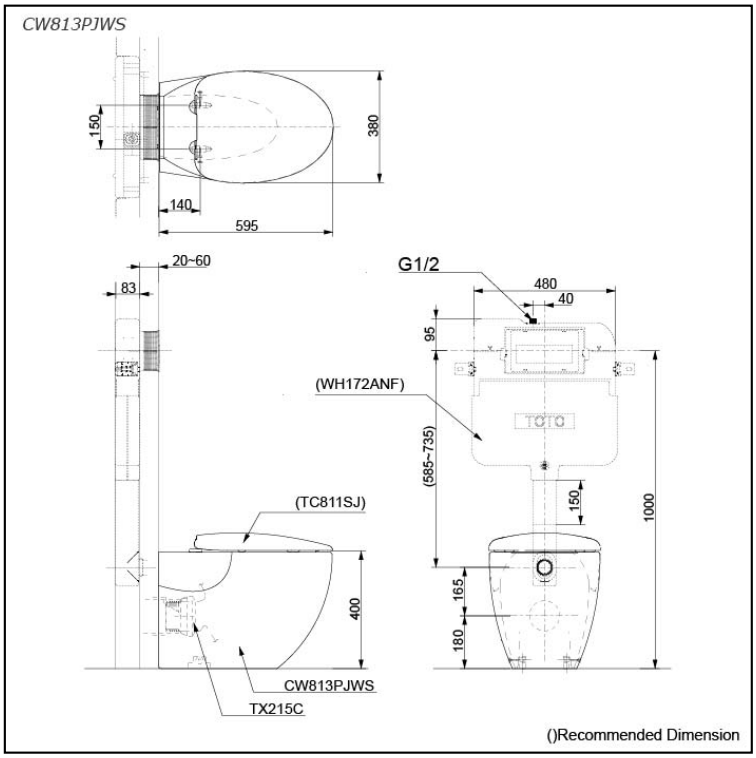

Features

- Modern styling exclusively for Le Muse design suite
- Dual Flush System
- WATER SAVING

Specifications

Flush system:	Wash Down
Water Use:	4.5L / 3L
Rough-in:	H=180 mm
Bowl Shape:	Elongated
Water Pressure:	0.05MPa~0.75MPa
Size:	380W x 595D x 400H mm

Parts description

Seat & Cover is **not included.**

- **CW813PJWS**
  Elongated Wall Faced Closet Bowl (P-Trap) (Rough-in 180)

Optional Parts

- TC811SJ
  Soft Close Seat & Cover (Urea Resin)
- TX215C
  Slip-in Connector
- WH172ANF
  Concealed Cistern w/o Frame
- MB174P
  Flush Panel

Colors

White

Please consult a TOTO representative for more details

All rights reserved by TOTO company. Specifications and sizes are subject to change without notice.