LAVATORIES

L4704E

Console Lavatory

Features

- Its beautiful design that uses the ceramic natural roundness with ultra-thin frame
- Deliberately off-balance design expresses a distinctive sense of comfort
- Reminiscent of handwork produces a distorted shape that conveys a free form curve design resisting numerical specification
- CEFIONTECT technology:
  super smooth, ion barrier glaze for a clean lavatory

Specifications

Size:	460W x 420D x 130H mm
Material:	Vitreous China

Parts description

Faucet not included

- **L4704E**
  Console Lavatory

Optional Parts

- VM5D419#XW
  Drainage (For ZA, GE, GC, GM, GB, GF Faucet)
- VM5D417#XW
  Drainage (For GA, GO, GR, GS, LB, LN, LC & LF Faucet)

Colors

White

reddot winner 2020

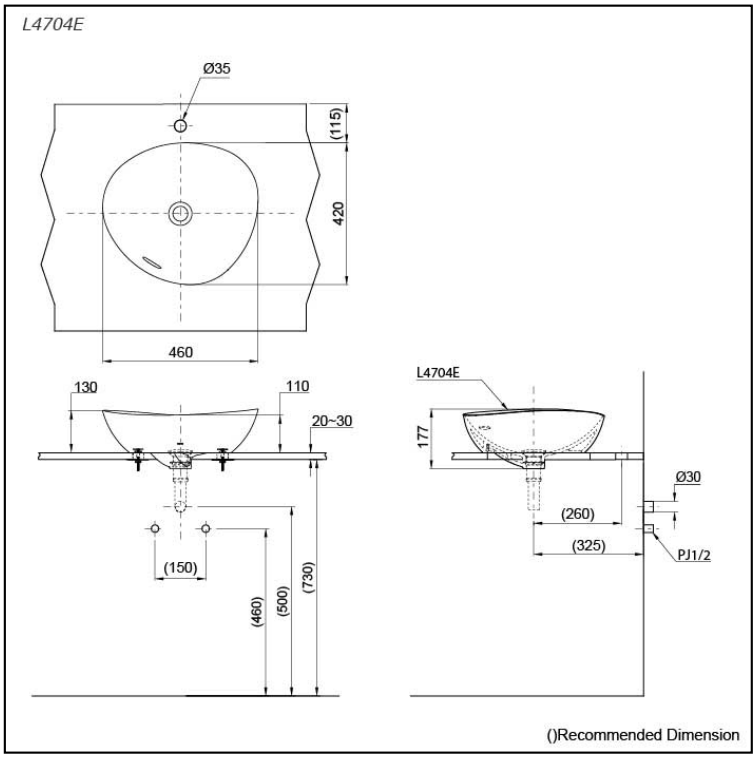

Please consult a TOTO representative for more details

All rights reserved by TOTO company. Specifications and sizes are subject to change without notice.