TOTO

LAVATORIES

Wall Hung Lavatory with Half Pedestal

LHT300CRV LT300CV

Features

- Simple, elegant styling
- Rear overflow
- CEFIONTECT Technology: super smooth, ion barrier glazing for a clean lavatory

Specifications

Size:	500W x 430D x 468H mm (LHT300CRV)
Size:	500W x 430D x 190H mm (LT300CV)
Material:	Ceramic

Parts description

Faucet not included

- **L300CE**
  Wall Hung Lavatory
- **L300HFE**
  Half Pedestal

Colors

White

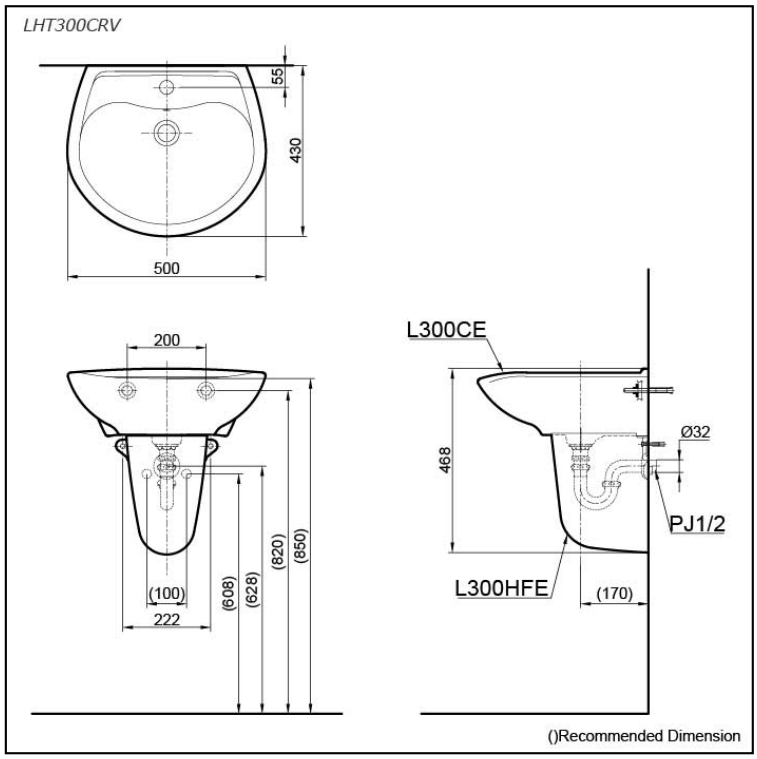

Please consult a TOTO representative for more details

All rights reserved by TOTO company. Specifications and sizes are subject to change without notice.