TOTO

LAVATORIES

LT300CV

Wall Hung Lavatory

Features

- Simple, elegant styling
- Rear overflow
- Petite, suitable for little space
- CEFIONTECT Technology: super smooth, ion barrier glazing for a clean lavatory

Specifications

Size:	500W x 430D x 190H mm
Material:	Ceramic

Parts description

Faucet not included

- **L300CE**
  Wall Hung Lavatory

Colors

White (CEFIONTECT)

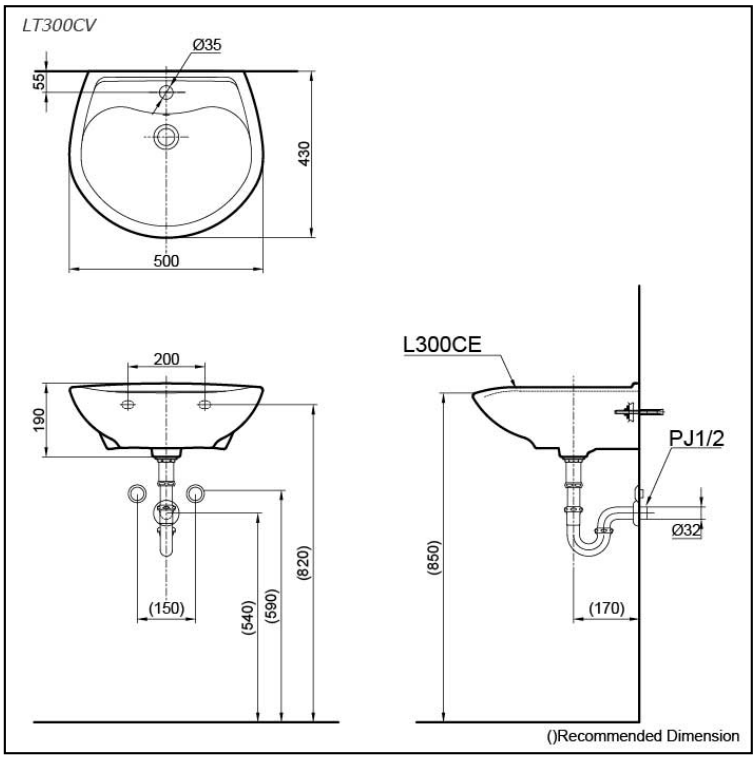

Please consult a TOTO representative for more details

All rights reserved by TOTO company. Specifications and sizes are subject to change without notice.