TOTO

LAVATORIES

Console Lavatory

LT4716VG19
LT4716VG17

Features

- A sharp linear design that matches modern architectural spaces
- CEFIONTECT Technology:
  super smooth, ion barrier glazing for a clean lavatory
- Front Overflow

Specifications

Size:	600W x 380D x 70H mm
Material:	Ceramic

Parts description

Faucet not included

- **LT4716VG19**
  L4716RE
  Console Lavatory w/ slotted Waste
  VM5D419#XW
  Drainage (For ZA, GE, GC, GM, GB, GF Faucet)
- **LT4716VG17**
  L4716RE
  Console Lavatory w/ slotted Waste
  VM5D417#XW
  Drainage (For GA, GO, GR, GS, LB, LN, LC & LF Faucet)

Colors

White (CEFIONTECT)

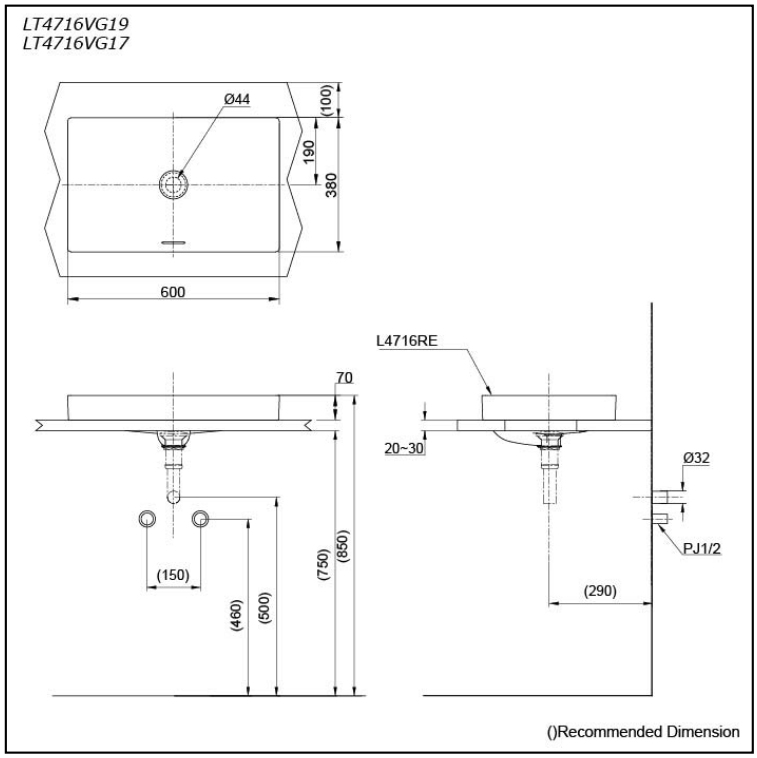

Please consult a TOTO representative for more details

All rights reserved by TOTO company. Specifications and sizes are subject to change without notice.