TOTO

LAVATORIES

Console Lavatory

LW1615B
LW1615CB

Features

- Simple and elegant square geometry appearance create a simple, stylish bathroom space
- CEFIONTECT technology: super smooth, ion barrier glazing for a clean lavatory
- Stylish, above counter design

Specifications

Size:	500W x 460D x 70H mm
Material:	Ceramic

Parts description

Faucet not included

- **LW1615CB**
  Console Lavatory (For 8” Faucet)
- **LW1615B**
  Console Lavatory (Single Hole Faucet)

Colors

White (CEFIONTECT)

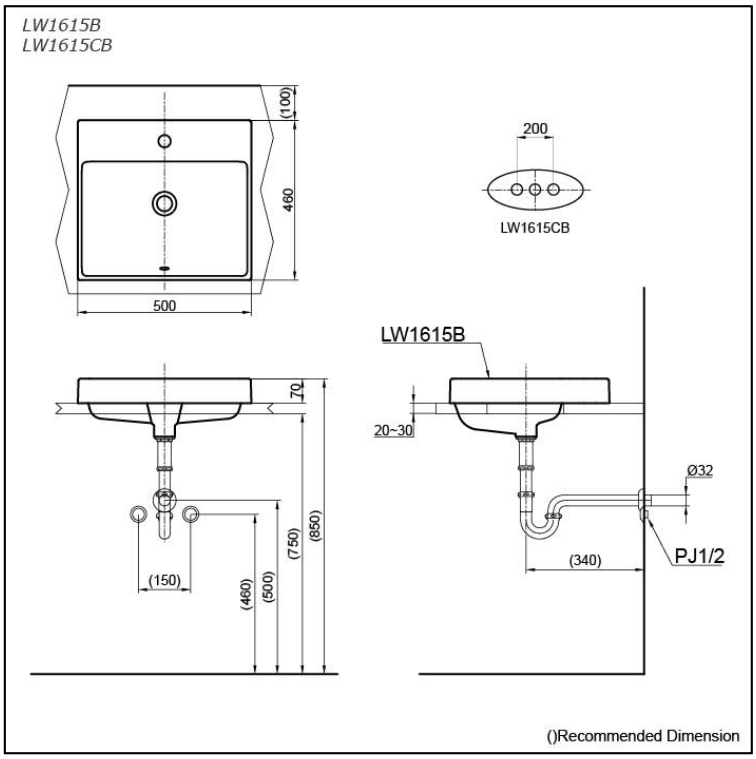

Please consult a TOTO representative for more details

All rights reserved by TOTO company. Specifications and sizes are subject to change without notice.