TOTO

LAVATORIES

Semi Recessed Lavatory

LW641NCJ
LW641NJ

Features

- Contemporary Design
- Rear overflow

Specifications

Size:	505W x 505D x 115H mm
Material:	Ceramic

Parts description

Faucet not included

- **LW641NCJ**
  Semi Recessed Lavatory (Single Hole Faucet)
- **LW641NJ**
  Semi Recessed Lavatory (For 8" Faucet)

Colors

White

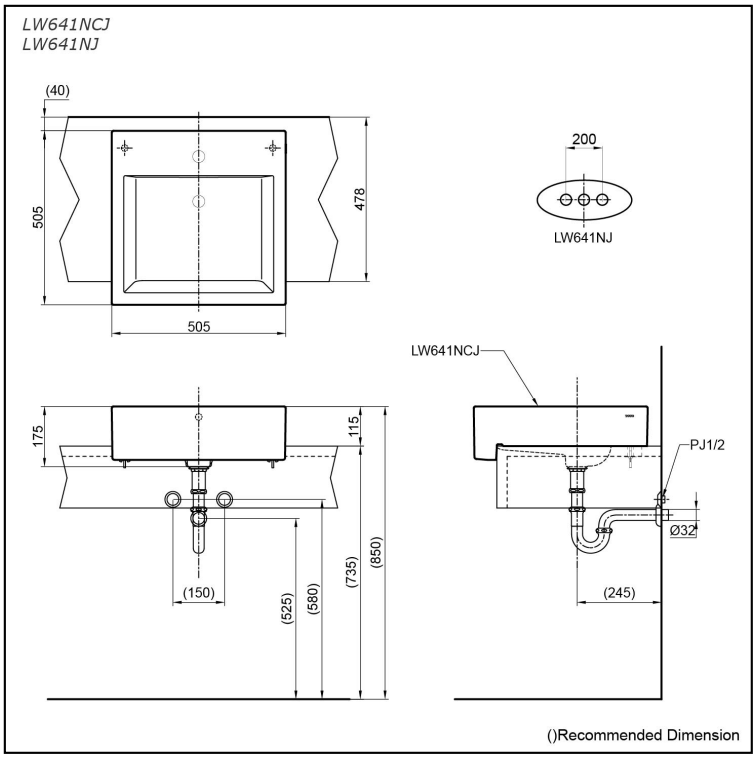

Please consult a TOTO representative for more details

All rights reserved by TOTO company. Specifications and sizes are subject to change without notice.