TOTO

LAVATORIES

LW818JW/F

LE MUSE
Console Lavatory

Features

- Modern styling exclusively for LE MUSE design suite

Specifications

Size:	650W x 370D x 150H mm
Material:	Ceramic

Parts description

Faucet not included

- **LW818JW/F**
  Console Lavatory

Colors

White

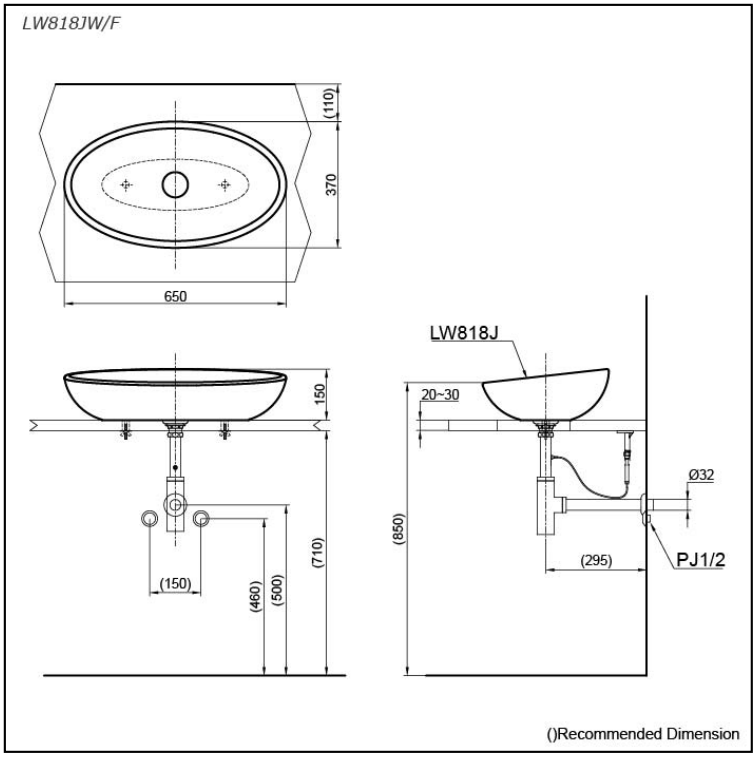

Please consult a TOTO representative for more details

All rights reserved by TOTO company. Specifications and sizes are subject to change without notice.