TOTO

LAVATORIES

LW897CJW/F

OMNI+
Wall Hung Lavatory

Features

- Curve, sleek and stylish design wall hung lavatory

Specifications

Size:	455W x 430D x 130H mm
Material:	Ceramic

Parts description

Faucet not included

- **LW897CJ**
  Wall Hung Lavatory (Single Hole Faucet)
- **TX801LN**
  Wall Mounting Bolt

Colors

White

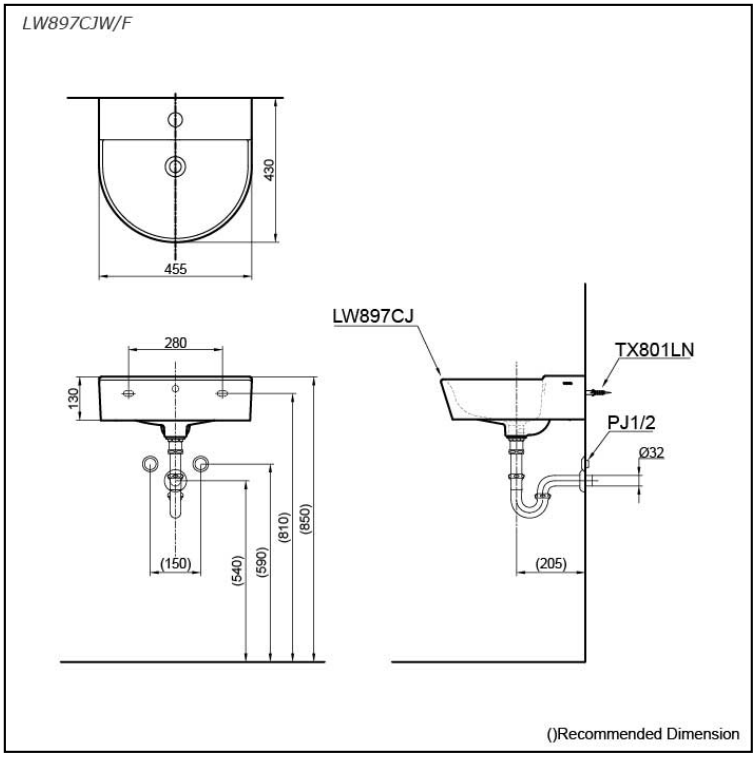

Please consult a TOTO representative for more details

All rights reserved by TOTO company. Specifications and sizes are subject to change without notice.