TOTO

WASHLET

TCF23400AAA

WASHLET C2

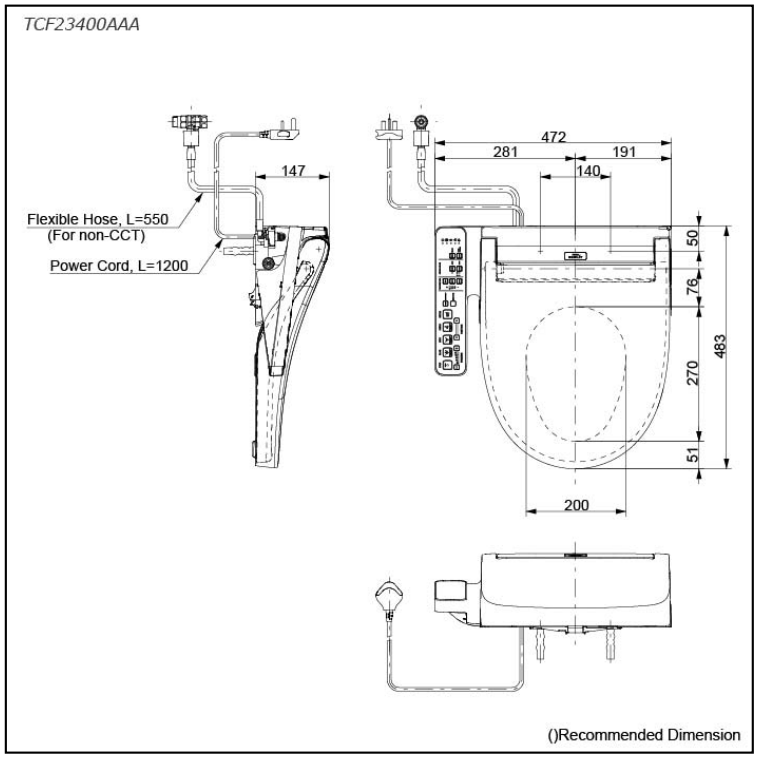

Features

- EWATER+ spreads out and keeps the nozzle clean by preventing bacteria with sanitizing effect
- PREMIST water is sprayed inside the toilet bowl to make it difficult for dirt to adhere
- Fully equipped with comfortable rear, front and oscillating cleansing functions
- Adjustable WARM AIR DRYING
- HEATED SEAT with temperature control
- Auto powerful DEODORIZER activates after every usage

EWATER+ is made from tap water by electrolyzed chloride ion without any chemicals. After use, it returns to normal water in the state of safe and environmental friendly

Specifications

Bowl Shape:	Round
Water Pressure:	0.05Mpa~0.75Mpa
Power Rating:	220~240V , 50/60Hz, 315~371W
Length of Power Cord:	1.2 m
Material:	Plastic
Size:	472W x 483D x 147H mm

Parts description

- **TCF23400AAA**
  WASHLET
  Round

Colors

White #NW1

Please consult a TOTO representative for more details

All rights reserved by TOTO company. Specifications and sizes are subject to change without notice.